Installation and Maintenance Manual

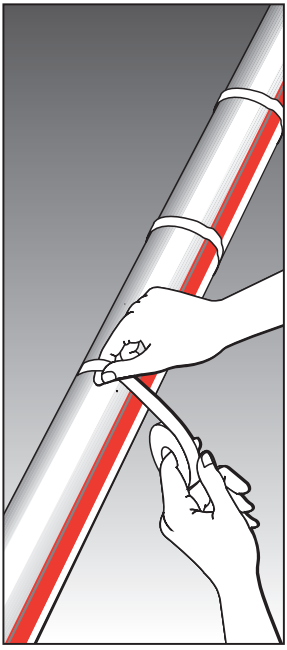

Constant Wattage Parallel Circuit Heating Cable Systems

1	General information	Pg. 1
2	Heating cable selection	Pg. 2
3	Heating cable installation	Pg. 3
4	Components installation	Pg. 13
5	Thermostats	Pg. 16
6	Thermal insulation and marking	Pg. 17
7	Power supply and electrical protection	Pg. 19
8	Heating cable testing	Pg. 19
9	Operation, maintenance and pipe repairs	Pg. 21
10	Heating cable damage	Pg. 22
11	Troubleshooting guide	Pg. 22

1 General information

Use of the manual

The Installation and Maintenance manual is for Isopad constant wattage parallel circuit heating cable systems on thermally insulated pipes and vessels only.
For information regarding other applications contact your Isopad representative.

Heating Cable Technology

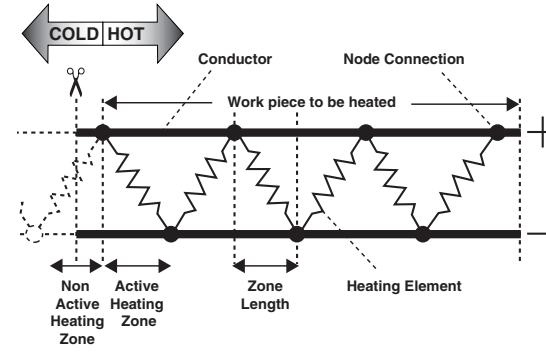

Important

For the Isopad warranty to apply, the instructions that are included in this manual and product packages must be followed. The installation must also be compatible with local requirements applicable to electric heat tracing systems.

Area Classification - Ordinary

IHT Rated Voltage: 220-240Vac
FG220 Rated Voltage: 110Vac or 230Vac
FG260 Rated Voltage: 110Vac or 230Vac

Area Classification - Hazardous, Zone 1 or Zone 2 and Ordinary

FHT Rated Voltage: 230Vac

KEMA

Certificate No. Code

FHT: KEMA 01ATEX2085X Ex II G EExe II T6 … 230C (T2)

Special conditions for safe use:
Refer to Hazardous area certification

	IHT	FHT	FG220	FG260
Minimum Bending Radius at Minimum Installation Temperature	25 mm	20 mm	20 mm	20 mm
Minimum Installation Temperature	–40°C	–65°C	–50°C	–50°C
Maximum Withstand Temperature (continuous, de-energised)	200°C	260°C	220°C	260°C
Temperature classification	–	Refer to Hazardous area certification	–	–
Minimum cable spacing between turns	10 mm	Refer to Hazardous area certification	10 mm	10 mm

Warning

As with any electrical equipment or wiring installation operating at line voltages, heating cable and component damage or incorrect installation that allows the penetration of moisture or contamination can lead to electrical tracking, arcing and potential fire hazard.

Do not connect heating cable conductors together or this will result in a short circuit.

Any unconnected heating cable end must be sealed with an Isopad approved end seal.

To prevent fire or explosion in hazardous areas, verify that the maximum sheath temperature of the heating cable is below the auto-ignition temperature of the gases in the area. For further information, see design documentation.

2 Heating cable selection

Check the design specification to make sure the proper heating cable is installed on each pipe or vessel.
Refer to Isopad product literature to select the proper heating cable for each thermal, chemical, electrical and mechanical environment.

3 Heating cable installation

3.1 Heating cable storage

- Store the heating cable in a clean, dry place
- Temperature range: –40°C to +60°C
- Protect the heating cable from mechanical damage

3.2 Pre-installation checks

Check materials received:

- Review the heating cable design and compare the list of materials to the catalogue numbers of heating cables and electrical components received to confirm that proper materials are on site. The heating cable type is printed on its outer jacket.
- Temperature exposure must not exceed that specified in Isopad product literature. Exceeding these limits will impair product performance. Check that expected exposure is within these limits.
- Ensure that the heating cable voltage rating is suitable for the service voltage available.
- Do not energize cable when it is coiled or on the reel.
- Inspect heating cable and components for in-transit damage. An insulation resistance test (see section 8) on each reel is recommended.

Check piping to be traced:

- Ensure all pressure testing is complete and pipework has final paint coating.
- Walk the system and plan the routing of the heating cable on the pipe.
- Check pipework against specification drawing. If different consult design authority.
- Inspect piping for burrs, rough surfaces, sharp edges etc. which could damage the heating cable. Smooth off or cover with layers of glass cloth tape or aluminium foil.

3.3 Heating cable handling

Heating cable handling tips:

- Paint and pipe coatings must be dry to the touch before heating cable installation.
- When pulling the heating cable, **avoid**:
  - sharp edges
  - excessive pulling force
  - kinking and crushing
  - walking on it, or running over it with equipment

Heating cable pulling tips:

- Use a reel holder that pays out smoothly with little tension.
- Keep heating cable strung loosely but close to the pipe being traced to avoid interference with supports and equipment.
- Pay out designed length and mark (i.e. with fixing tape) on cable while still on reel.
- Leave the appropriate amount of heating cable at all power connection, splice, tee and end seal locations. (Refer to component installation instructions)
  - **Add additional heating cable to trace the fittings and supports or for spiralling as required by the design specifications.**
- Protect all heating cable ends from moisture, contamination and mechanical damage or other interference if left exposed before component installation.

3.4 Heating cable attachment recommendations

- The heating cable may be installed straight, spiralled or in multiple runs as required by the design specification.
  - **Do not** use metal attachments, vinyl electrical tape or duct tape as heating cable damage may result.
- Fix in place with a minimum of two wraps the appropriate self-adhesive glass cloth tape (see figure 1) or plastic cable ties at 300 mm intervals and additionally where necessary.
- Plastic cable ties must have a temperature rating that matches the system exposure temperature.
- The heating cable's minimum bend radius must not be exceeded (refer to p. 2)
- The heating cable's minimum spacing between turns must not be exceeded (refer to p. 2)

3.4.1 Straight tracing

- Straight trace the pipe unless the design calls for spiralling (see 3.4.2).
- On horizontal pipes fix on lower quadrant as shown in Figure 1 and not on bottom of pipe.
- To prevent overheating, be sure the location of the heating cable is planned so that the active heating zone will not extend into the component. Read the kit installation instructions and plan the component location before permanently attaching the cable to the pipe.

  Ensure that the active heating zones are located where heat is required i.e. on the pipe.
- Thermally insulate and weatherproof to specification.
- When installing Isopad constant wattage parallel circuit heating cables ensure that they do not overlap or cross.

Figure 1

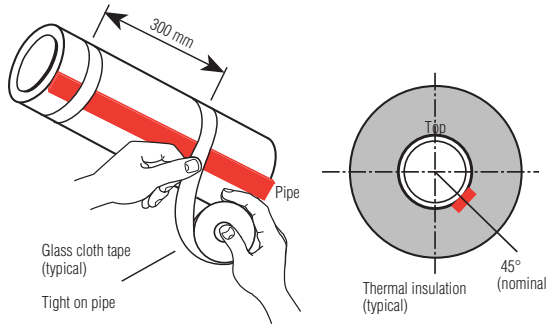

Isopad attachment tapes:

GT66 Self-adhesive glass cloth tape
General purpose tape.

GS54 Self-adhesive glass cloth tape
Recommended for use on stainless-steel and cupra-nickel surfaces and high temperature applications.

Figure 2

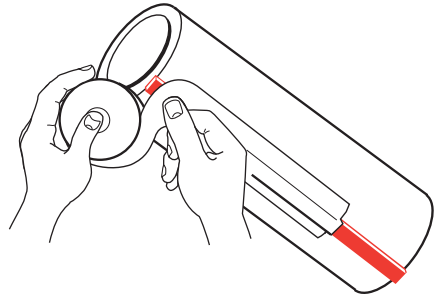

ATE-180 Aluminium tape
Use only if the design requires it.

3.4.2 Spiral tracing

- Alternative spiralling methods are shown in Figures 2a and 2b.
- Only spiral heating cable on pipe when called for by design.
- To prevent overheating, be sure the location of the heating cable is planned so that the active heating zone will not extend into the component. Read the kit installation instructions and plan the component location before permanently attaching the cable to the pipe.

  Ensure that the active heating zones are located where heat is required i.e. on the pipe.

Spiral Pich Table (mm).

NB	NPS	**Spiral Ratio** - Metres of cable per metre of pipe				
(mm)	(inches)	**1.1**	**1.2**	**1.3**	**1.4**	**1.5**
25	**1**	250	170	140	110	100
32	**1 1/4**	310	210	170	140	130
40	**1 1/2**	350	240	190	160	140
50	**2**	430	300	240	200	180
65	**2 1/2**	520	360	290	240	210
80	**3**	630	430	350	290	260
90	**3 1/2**	720	490	390	330	290
100	**4**	800	560	440	370	330
125	**5**	990	680	550	460	400
150	**6**	1180	810	650	550	480
200	**8**	1520	1050	840	710	620

Example: For pipe of 80 mm NB (3" NPS) requiring 1.3 metres of heating cable per metre of pipe, pitch is 350 mm.

- Thermally insulate and weatherproof to specifications.
- When installing Isopad constant wattage parallel circuit heating cables ensure that they do not overlap or cross.

Figure 2a

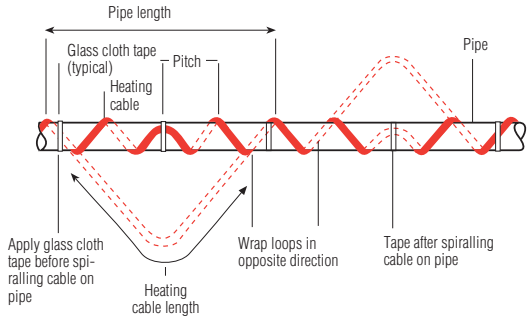

Heating cable length = pipe length x spiral ratio
Refer to design specification for spiral ratio

Step 1 Make starting loop as shown

Step 2 Grasp loop and wind around pipe

Step 3 Space evenly and attach to pipe
Thermally insulate and weatherproof to specification

Figure 2b

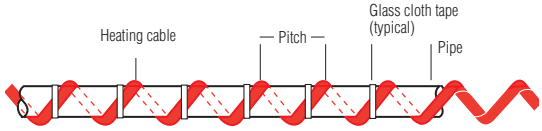

Refer to design specification for spiral pitch

Mark the pipe at the spiral pitch or use a simple length gauge

Fix the heating cable as installation progresses
Thermally insulate and weatherproof to specification

3.5 Cutting the heating cable

- Cut the heating cable to length after it is attached to the pipe.
Before cutting it, confirm the tracing allowance as per Sections 3.3 and 3.6.

3.6 Typical installation details

- Typical installation details for fixing heating cable to pipe fittings are shown hereafter.

General notes:

- Trace pipe fittings as shown to allow easy maintenance.
- Consult the design specification for the tracing requirements for fittings and supports.
- Follow the recommendations for cutting and stripping heating cables; they are included in the component installation instructions.

3.6.1 Valve

Figure 3

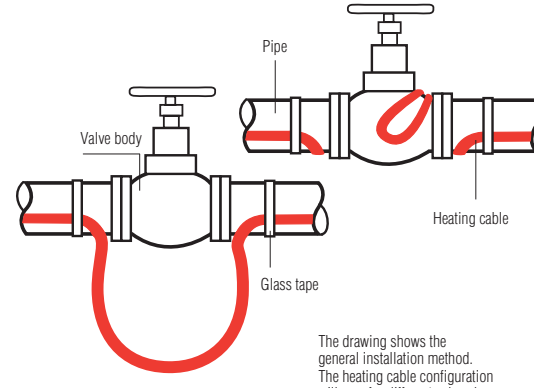

- Refer to design specification for additional heating cable length.
- Fix with self-adhesive glass cloth tape.
- Thermally insulate and weatherproof to specification (including valve stem).
- No overlapping or crossing of the heating cable.

3.6.2 Elbow

Figure 4

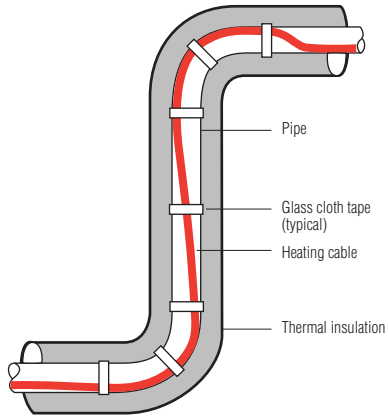

- Fix heating cable to outside (long) radius of elbow
- Fix with self-adhesive glass cloth tape
- Thermally insulate and weatherproof to specification
- No overlapping or crossing of the heating cable.

3.6.3 Flange

Figure 5

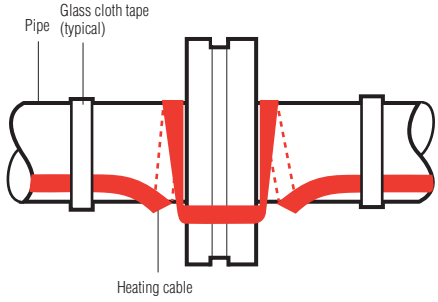

- Additional heating cable is 2 times diameter of pipe
- Fix with self-adhesive glass cloth pipe
- Thermally insulate and weatherproof to specification
- No overlapping or crossing of the heating cable.

3.6.4 Pipe bar hanger

Figure 6

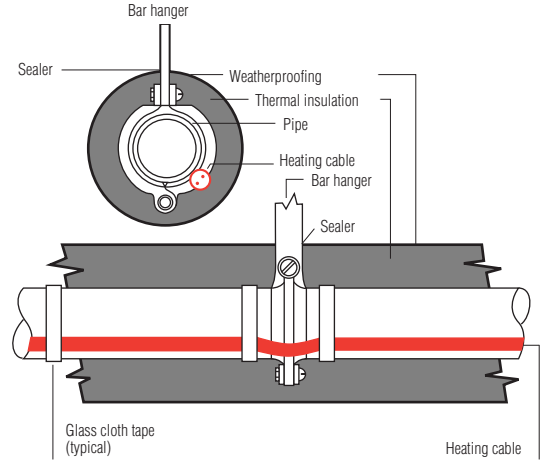

- **Do not** clamp heating cable with support. Heating cable must be over the support
- No additional heating cable is required for bar or rod pipe hangers unless called for in the design specification, then use loop length specified
- Fix with self-adhesive glass cloth tape
- Thermally insulate and weatherproof to specification
- No overlapping or crossing of the heating cable.

3.6.5 Pipe support shoe

Figure 7

Side view

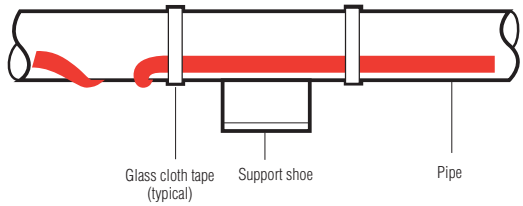

View from under

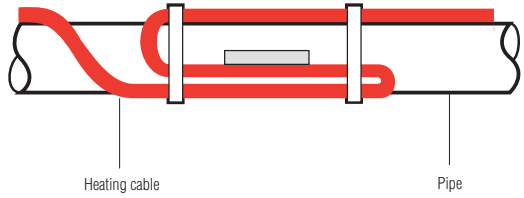

- Refer to design specification for additional heating cable length
- Fix with self-adhesive glass cloth tape
- Thermally insulate and weatherproof to specification
- No overlapping or crossing of the heating cable.

4 Components installation

General notes:

Use the Design Specification to select required components.

Isopad component kits (including power connections, splices and end seals) must be used to satisfy Standards and Approval Body requirements.

Installation instructions included in the kit must be followed, including those for preparation of the heating cable conductors for connections. Before assembly, use the guide given in the instructions to ensure that the kit is correct for the heating cable and environment.

- Isopad constant wattage parallel circuit heating cables are parallel circuit design. **Do not** twist the conductors together as this will result in a short circuit.

4.1 Components required

- For the installation of all components refer to the relevant component installation instructions.
- Required for each heating cable run:
  Power connection and insulation entry kit
  End seal.
- As required:
  Accessories (pipe straps, fixing tape, support brackets, labels, etc)

4.2 Component installation hints

- On horizontal pipes locate junction boxes below pipe wherever possible.
- Locate junction boxes for easy access but not exposed to mechanical abuse.
- Position junction boxes so that power cable and heating cable entries do not point upwards.
- Fix lids in place where access not required.
- Confirm junction box stopping plugs are correct for application and fixed firmly in place.
- Route heating cable from junction box to insulation entry so as to avoid possible mechanical damage.
- **Do not** strain heating cable as it exits/enters junction boxes and insulation entries.
- Ensure heating cable is fixed above pipe straps such as used for junction box support brackets.
- Fix all low profile components (e.g. heatshrink end seals) in place with self-adhesive glass cloth tape.

4.3 Typical Installations

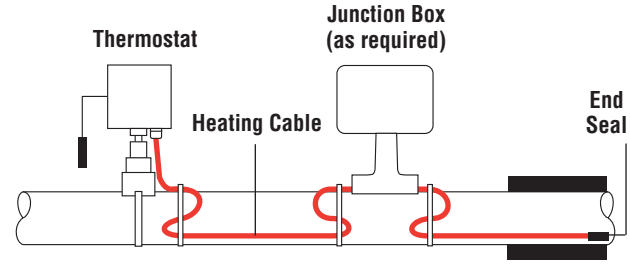

Ambient Sensing System

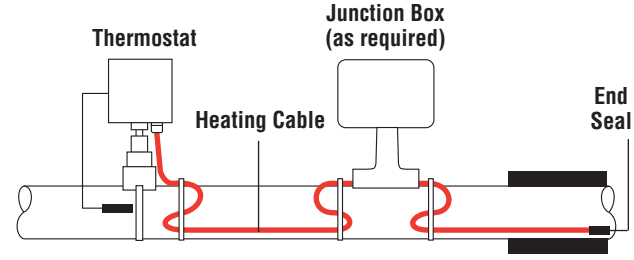

Surface Sensing System

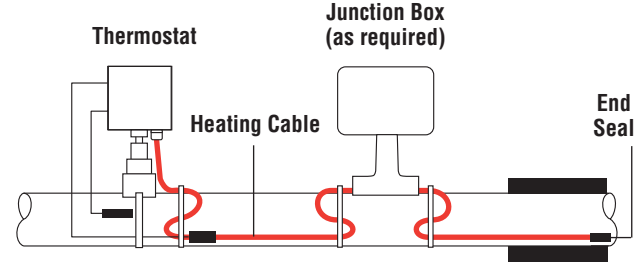

Dual Sensing System

Interex Katowice, ul. Strzelców Bytomskich 8., 40-310 Katowice, Tel 32 2039241, Fax 32 7900785, www.interexkatowice.pl, www.interex.strefa.pl

5 Thermostats

- Isopad constant wattage parallel circuit heating cables are constant power output tracers and as such ALWAYS require temperature control.
- The FHT range of heating cables may be used in an electric surface heating system in a hazardous area that meets the requirements of a stabilised design within the constraints of the FHT Ex certification.

  If a stabilised design cannot be achieved, then a thermostat control with a limiter that complies with the requirements of clause 5.8.10 of EN 50019: 2000 shall be used. The limiter shall be set to ensure that the maximum temperature of the surface to be heated does not exceed that specified in the FHT Ex certification for a given output in a specific temperature classification.
- ALWAYS installed the correct and suitably approved thermostat as detailed in the design specification.
- Follow the installation instructions supplied with the thermostat. Use the proper wiring diagram for the heating cable layout and control method desired.

6 Thermal insulation and marking

6.1 Pre-insulation checks

- Visually inspect the heating cable and components for correct installation and damage. (See Section 10 if damaged.)
- Insulation resistance (Megger) testing (as per Section 8) is recommended prior to covering the pipe with thermal insulation.

6.2 Insulation installation hints

- Correct temperature maintenance requires properly installed and dry thermal insulation.
- Thermally insulate and weatherproof to design specification.
- Check insulation type and thickness against the design specification.
- To minimize potential heating cable damage, insulate as soon as possible after tracing.
- Check that all pipework, including fittings, wall penetrations and other areas, has been completely insulated.
- Ensure that heating cable is not damaged during installation of cladding for example by drills, self tapping screws and sharp edges of cladding.
- Check that all insulation entry kits are fitted correctly and sealed.
- Ensure that all places where valve stems, support brackets, thermostat capillaries, etc exit the cladding are sealed.

6.3 Marking

- Install "Electric Traced" signs along piping at suitable intervals (3 m intervals recommended) on alternate sides as a warning.
- Mark on outside of insulation the location of heating cable components.

7 Power supply and electrical protection

7.1 Electrical loading

Size overcurrent protective devices according to the design specification.

7.2 Residual current (earth fault) protection

Isopad insists on the use of a 30 mA residual current device to provide maximum safety and protection. However, where there is a marked increase in nuisance tripping, a maximum 300 mA residual current device may be used.
For heating cables installed in a hazardous area, the use of residual current devices is normally a condition of their approval.

8 Heating cable testing

8.1 Recommendations

Isopad recommends insulation resistance test
before installing heating cable;
before installing thermal insulation;
prior to initial start-up; and
as part of the periodic maintenance. (see Section 9.2).

8.2 Test method

After completing heating cable installation, the insulation resistance between the conductors and the braid or metal pipe should be checked (see Section 6.1) using a 2.500 VDC megger. Minimum readings should be 10 Megohms regardless of the heating cable length. The installer should record the original values for each circuit on the installation record sheet (see page 25).

Figure 4

Test A: Test between heating cable and braid

Test B: Test between heating cable braid and pipe

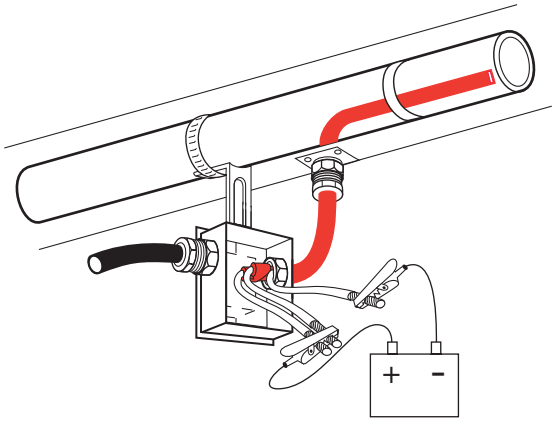

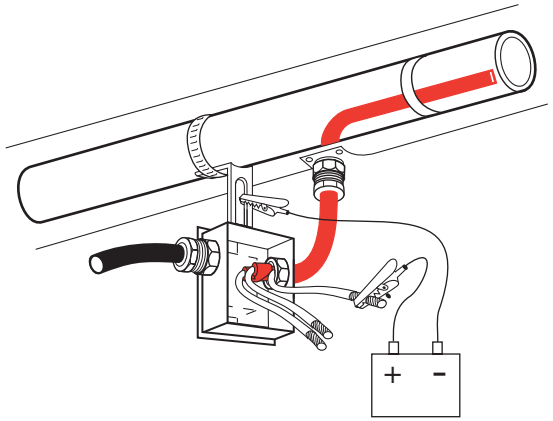

9 Operation, maintenance and pipe repairs

9.1 Heating cable operation

- **Temperature exposure must not exceed that specified in Isopad product literature. Exceeding those limitations will shorten the service life and may permanently damage the heating cable.**
- Pipe insulation must be complete and dry to maintain the correct temperature.

9.2 Inspection and maintenance

- Visual inspection: Exposed heating cable and pipe insulation should be checked periodically to make sure that no physical damage has occured.
- Meggering: The system should be meggered regularly. When meggering the insulation resistance from the main supply panel, it is recommended that the test is performed between L/N (together) and PE. Freeze protection systems should be meggered before the winter months each year (see section 8). Temperature maintenance systems should be tested at least twice a year. Function testing of electrical protection and temperature control systems should be carried out at regular intervals.
- The Periodic Inspection Record on the following pages should be filled out during maintenance of each circuit in your system.

9.3 Piping systems repair and maintenance

- Isolate heating cable circuit and protect the heating cable from mechanical or thermal damage during pipe repair work.
- Check heating cable installation after pipe repairs and restore thermal insulation following the recommendations in Section 6. Check correct functioning of electrical protection systems.

10 Heating cable damage

- **Do not repair damaged heating cable.**
  Remove entire damaged section and splice in a new length using the appropriate Isopad components.
- **Replace damaged heating cable at once.**
  Damage allowing moisture and contamination to enter the heating cable may result in arcing earth faults and potential fire hazards.
- Heating cable exposed to fire or flame may cause further fire damage if powered.
  Remove from service at once and replace before re-use.

11 Troubleshooting guide

Refer to the Troubleshooting guide on pages 28-31.
If the problem persists after following the guide procedures, contact your Isopad representative immediately.

INSTALLATION RECORD SHEET

INSTALLATION RECORDS FOR:		CIRCUIT NO.							
Circuit breaker number									
Drawing reference number									
Megger test on pipe before insulating (bypass thermostat if applicable).	Reading								
	Initial								
	Date								
Megger test after insulating (bypass thermostat if applicable).	Reading								
	Initial								
	Date								
Circuit voltage	Panel								
	Connection terminals								
Insulation completed and sealed	Initial								
	Date								
Locations of low profile components are marked on the cladding.	Initial								
	Date								

REMARKS & COMMENTS:

INSPECTION AND MAINTENANCE RECORD SHEET

MAINTENANCE CHECKS FOR:		CIRCUIT NO.			MONTH			YR.	
No signs of overheating, moisture, or corrosion, etc.	Initial								
	Date								
In connection systems Heating cable and cable glands tight Connection terminals tight Earth connection tight Insulation in good condition	Initial								
	Date								
Thermostats set properly and capillaries are protected	Initial								
	Date								
Megger test (bypass thermostat if applicable)	Reading								
	Initial								
	Date								
Circuit voltage	Panel								
	Connection terminals								
All boxes and thermostats have been firmly closed	Initial								
	Date								
Locations of under insulation components are marked on the insulation lagging	Initial								
	Date								

REMARKS & COMMENTS

Interex Katowice, ul. Strzelców Bytomskich 8., 40-310 Katowice, Tel 32 2039241, Fax 32 7900785, www.interexkatowice.pl, www.interex.strefa.pl

Interex Katowice, ul. Strzelców Bytomskich 8., 40-310 Katowice, Tel 32 2039241, Fax 32 7900785, www.interexkatowice.pl, www.interex.strefa.pl

Troubleshooting guide

A **Symptom:** Overcurrent protection trips or blows.

	Probable Causes		Corrective Actions
1	Electrical fault at: **a** damaged heating cable **b** faulty splices or tees **c** end seal **d** connection	**1**	Investigate and remedy (see note 1):
2	Circuit oversized	**2**	Resize or redesign
3	Start-up below design temperature	**3**	**a** redesign for lower start-up temperatures. **b** preheat pipe from alternative heat source to within exposure temperatures given in Product Data Sheets. **c** Energize part of circuit followed by remainder (e.g. in sequence.
4	Defective electrical protection	**4**	Replace.

B **Symptom:** RCD trips.

	Probable Causes		Corrective Actions
1	Earth fault at: **a** damaged heating cable **b** faulty splices or tees **c** end seal **d** connection	**1**	Investigate and remedy (see note 1):
2	Excessive moisture in: **a** junction boxes **b** splices and tees **c** end seals	**2**	Dry out and reseal or remake immediately. Perform insulation resistance test. (10 MΩ minimum)
3	High leakage currents due to a combination of excessive lengths of power cable and heating cable.	**3**	Redesign
4	Mains borne disturbances	**4**	Redesign distribution, guidance is available from Isopad
5	Defective RCD	**5**	Replace.

C **Symptom:** No power output.

	Probable Causes		Corrective Actions
1	Loss of supply voltage due to: **a** overcurrent or residual current protection operating **b** loose terminals in junction box **c** loss of supply cable continuity (e.g., open circuited from damage	**1**	Restore supply voltage **a** following **A** and **B** (page 28) **b** re-tighten terminals NB: If excessive heating has occured due to high resistance, replace terminals or crimps **c** locate damage and repair
2	Control thermostat is connected in the normally open position or limit thermostat is tripped	**2**	Reconnect to normally closed position
3	High resistance connection at: **a** junction box terminals **b** splices and tees	**3**	Locate and remedy by: **a** retighten **b** repair NB: If excessive heating has occured due to high resistance, replace terminals or crimps

D **Symptom:** Low pipe temperature.

	Probable Causes		Corrective Actions
1	Wet thermal insulation	**1**	Remove and replace with dry insulation of correct specification and ensure complete weatherproofing
2	Design error	**2**	**a** check with competent authority for design conditions **b** modify to meet Isopad recommendations
3	Incorrect setting or operation of controls e.g., thermostats.	**3**	Repair or reset to correct level of operation

Note:
Locate faults by the following steps:
1 Visually inspect the power connections, splices and end seals for correct installation.
2 Look for signs of damage at:
a) Valves, pumps, flanges and supports.
b) Areas where repairs or maintenance work has been carried out.
3 Look for crushed or damaged insulation and cladding along the pipe.
4 If after 1, 2 and 3 above the fault has not been located, then either:
a) Consult Isopad for futher assistance.
b) Where local practices and conditions allow (e.g., non hazardous areas) isolate one section of heating cable from another by cutting in half and testing (e.g., Insulation Resistance) both halves until general area of damage is found.
Remove insulation and expose fault.

Notes:

Notes:

Bytomskich 9, 40-340 Katowice, Tel 32 2039241, Fax 32 7900785, www.interexk

Isopad is a trademark of Tyco Electronics.

All of the above information, including illustrations, is believed to be reliable. Users however, should independently evaluate the suitability of each product for their application. Tyco Thermal Controls makes no warranties as to the accuracy or completeness of the information and disclaims any liability regarding its use. Tyco Thermal Controls's only obligations are those in the Standard Terms and Conditions of Sale for this product and in no case will Tyco Thermal Controls be liable for any incidental, indirect or consequential damages arising from the sale, resale, use or misuse of the product. Tyco Thermal Controls Specifications are subject to change without notice. In addition Tyco Thermal Controls reserves the right to make changes in materials or processing, without notification to the Buyer, which do not affect compliance with any applicable specification.

België / Belgique
Electrical Tracing
Geestbeekweg 5
3210 Lubbeek
Tel. (016) 35 39 00
Fax (016) 25 27 26

Česká Republika
Raychem HTS s.r.o.
Novodvorská 82
14200 Praha 4
Phone (02) 41 00 92 15
Fax (02) 41 00 92 19

Danmark
Raychem HTS Nordic
Naverland 8
2600 Glostrup
Tlf. 70 11 04 00
Fax 70 11 04 01

Deutschland
Tyco Thermal Controls GmbH
Englerstraße 11
69126 Heidelberg
Tel. (0 62 21) 30 43-950
Fax (0 62 21) 30 43-956

España
Tracelec
P.I. Estación-Nave 14C-Ap75
43480 Vila-Seca (Terragona)
Tel. (34) 902 392 711
Fax (34) 902 392 709

France
Tyco Thermal Controls SA
B.P. 738
95004 Cergy-Pontoise Cedex
Tél. (01) 34 40 73 30
Fax (01) 34 40 73 33

Hrvatska
ELGRI d.o.o.
S. Mihalica 2
10000 Zagreb
Tel. (1) 6050188
Fax (1) 6050187

Italia
Tyco Electronics Raychem SPA
Centro Direzionale Milanofiori
Palazzo E5
20090 Assago, Milano
Tel. (02) 57 57 61
Fax (02) 57 57 62 01

Magyarország
Raychem Ges.m.b.H.
Magyarországi Közvetlen Képviselet
Grassalkovich ut 255.
1239 Budapest
Tel. (1) 289 20 40
Fax (1) 289 20 45

Nederland
Raychem b.v.
Van Heuven Goedhartlaan 121
1181 KK Amstelveen
Tel. (020) 6400411
Fax (020) 6400469

Norge
Raychem HTS A/S
Trollåsveien 36
Postboks 632
1411 Kolbotn
Tel. 66 81 79 90
Fax 66 80 83 92

Österreich
Tyco Electronics Austria Ges.m.b.H.
Tyco Thermal Controls
Brown-Boveri Strasse 6/14
2351 Wiener Neudorf
Tel. (0 22 36) 86 00 77
Fax (0 22 36) 86 00 77-5

Polska
Raychem Polska Sp. z o.o.
Tyco Thermal Controls
ul. Pulawska 354/356
02-819 Warszawa
Tel. (022) 54 52 950
Fax (022) 54 52 951

Schweiz / Suisse
Spectratec AG
Haldenstrasse 5
Postfach 2724
6342 Baar
Tel. (041) 766 30 80
Fax (041) 766 30 81

Suomi
Tyco Thermal Controls
Puh. 0800 11 67 99
Telekopio 0800 11 86 74

Sverige
Raychem HTS Nordic AB
Kanalvägan 3A
194 61 Upplands Väsby
Tfn. 08-59 00 94 60
Fax 08-59 09 25 70

United Kingdom
Tyco Thermal Controls
Faraday Road
Dorcan, Wiltshire
SN3 5HH
Tel. (01793) 572 663
Fax (01793) 572 629

РОССИЯ и другие страны СНГ
РАЙХЕМ
125315, г. Москва
Ленинградский проспект, дом 72,
офис 807
Тел.: (095) 7211888
Факс: (095) 7211891

tyco
Flow Control

Tyco Thermal Controls

www.tycothermal.com

© 2001 Tyco Thermal Controls DOC-2094 PCN 089112-000 Rev.1 03/02 Printed in Belgium on chlorine-free bleached paper